Addictive Desert Designs

2016 – Current Nissan Titan Rear Bumper
Installation Instructions

PREPARATION

1. Disconnect the negative terminal on the battery. Park the vehicle on level ground and set the emergency brake.
2. We recommend reading through the installation instructions in whole before performing the work.
3. Estimated Installation Time: **2 Hours**
4. You will need the following tools:
    a. Ratchet
    b. Assorted Metric Sockets
    c. Flat Head Screwdriver
    d. T-45 Torx Socket
    e. Wire Crimpers
    f. Butt Connectors (x4)
    g. Drill
    h. 11/32" Drill Bit

    Note: this installation requires 2 people for best results
5. Included in Kit:
    6 – Hex Head Bolts – 1/2"-13 x 1 1/2"
    12 – Flat Washers – 1/2"
    6 – Nylon Locking Nuts – 1/2"-13
    1 – LED License Plate Light Kit
    2 – Bumper Mounting Brackets
    1 – Trailer Plug Relocation Bracket
    2 – Thread Cutting Bolts – 3/8"-16

REMOVAL

1. Remove your license plate.
2. Unplug the trailer plug connector and the parking sensor harness connector. (Fig A)

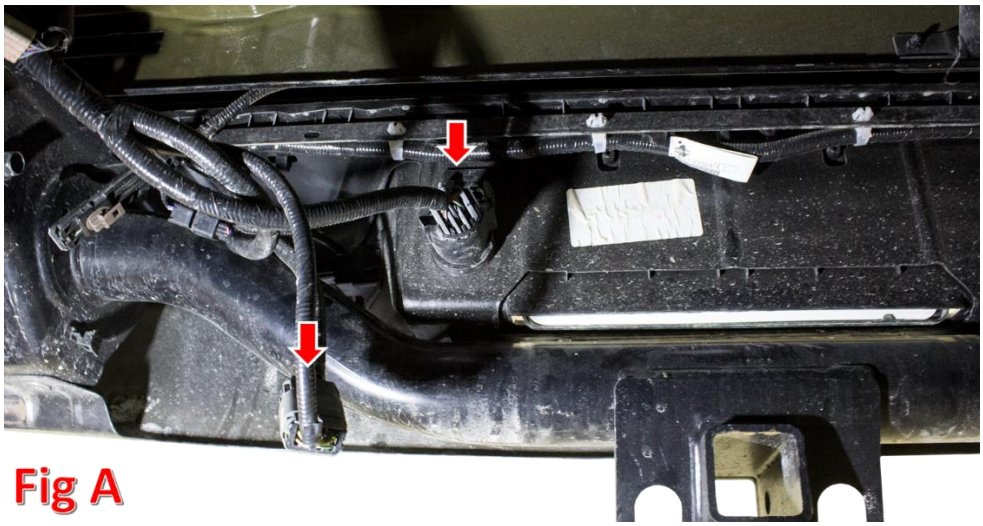

Fig A

3. Unplug the license plate light harness connector. (Fig B)

4. Push in the two tabs on the back of Trailer Plug to remove it from the OEM bumper. (Fig C)

5. Pull the top plastic piece off of the OEM bumper. There are no tools required for this step, it simply pulls off by hand. (Fig D)

Fig D

6. Use a T-45 Torx Bit to remove the bumper mounting bolts (3 per side). (Fig E)

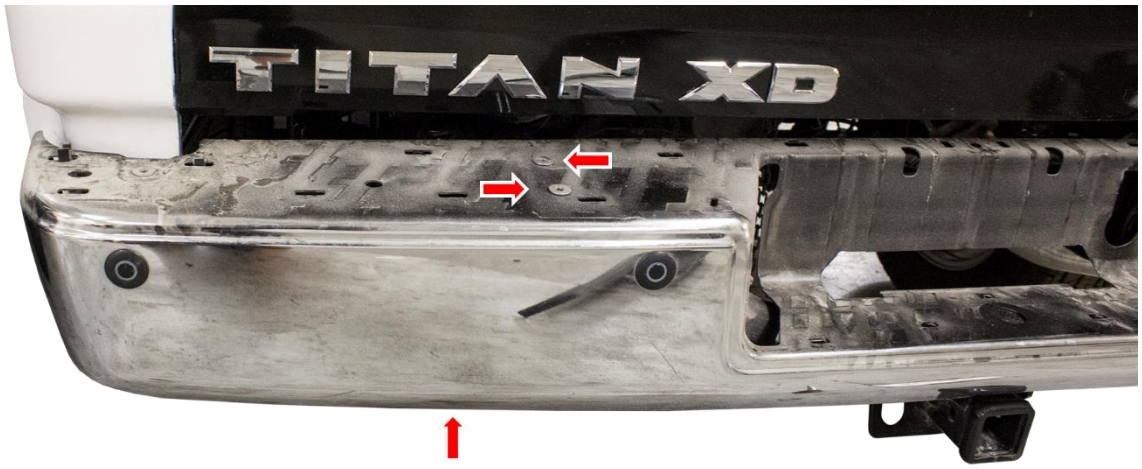

Fig E

7. Remove the OEM Rear Bumper. (Fig F)

Fig F

8. Prepare to install your new ADD Rear Bumper.

INSTALLATION

1. If you have any lights to install on your new bumper, now is a good time to do so. Please follow the light manufacturer's installation instructions for wiring/mounting information.
2. Remove the parking sensors/parking sensor harness from your OEM bumper and install the assembly on your new bumper.
3. Remove the trailer hitch bolts (x6) along the inner rail of the rear frame. (Fig G)

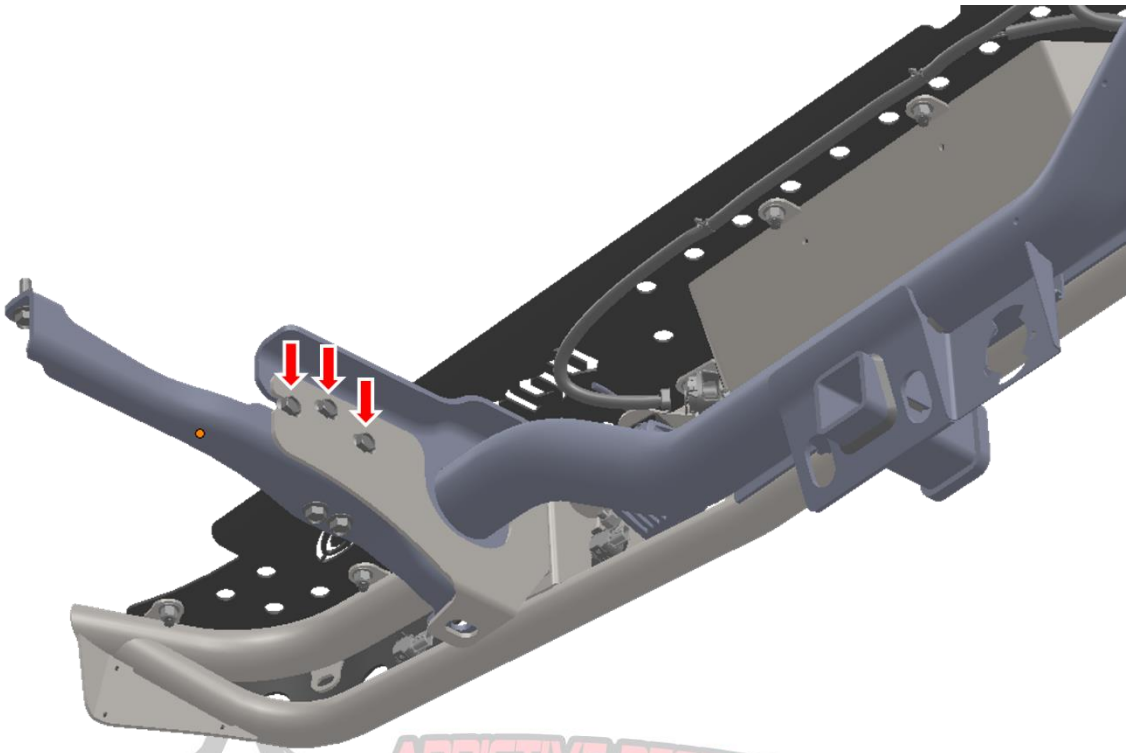

Fig G

4. Set the ADD Bumper Mounting Plates in place. Then, loosely install the bolts you removed in Installation Step 3 to hold it in place. Use the supplied 1/2” Bolts (x2), 1/2” Washers (x4), and 1/2” Nuts (x2) for the lower mounting holes on these plates. (Fig H)

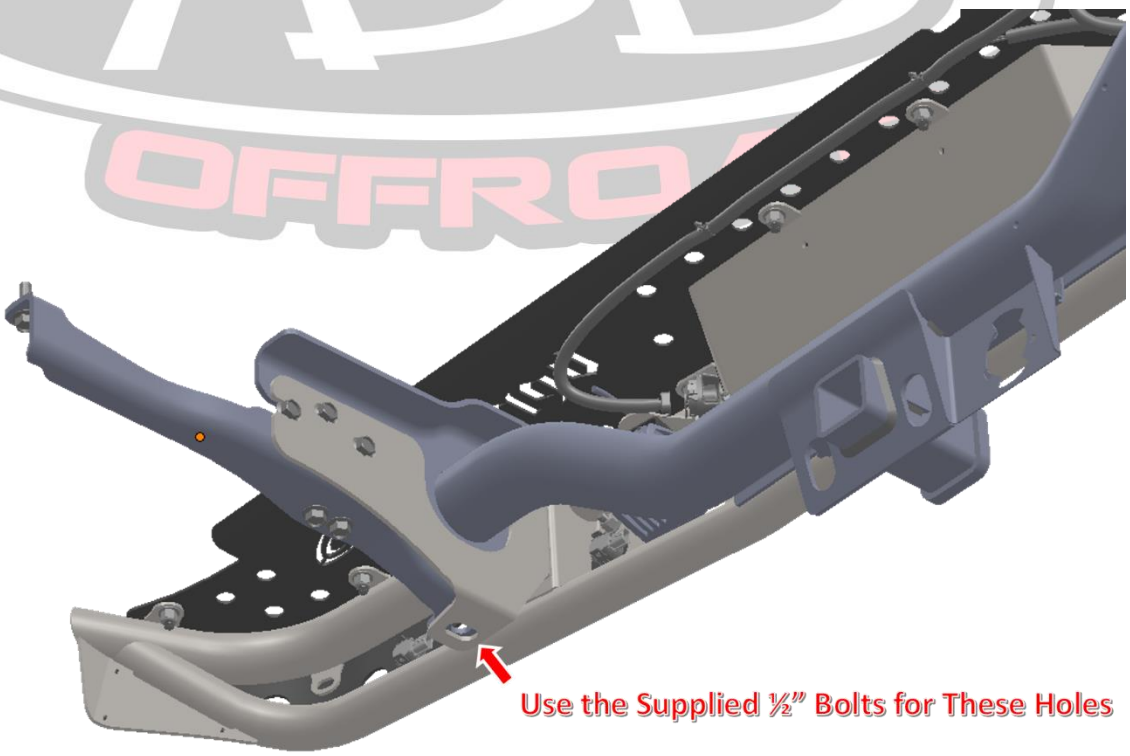

Fig H

5. Once every bolt is loosely installed, pull the mounting plates all the way towards the rear of the vehicle, then tighten the mounting bolts. Torque the OEM Bolts to OEM torque specifications. Tighten the 1/2” Supplied Bolts to 70 foot pounds.

6. Set your new ADD bumper in place. Line up the mounting holes on the back of the bumper with the mounting holes on the newly installed bumper mounting plates. (Fig I)

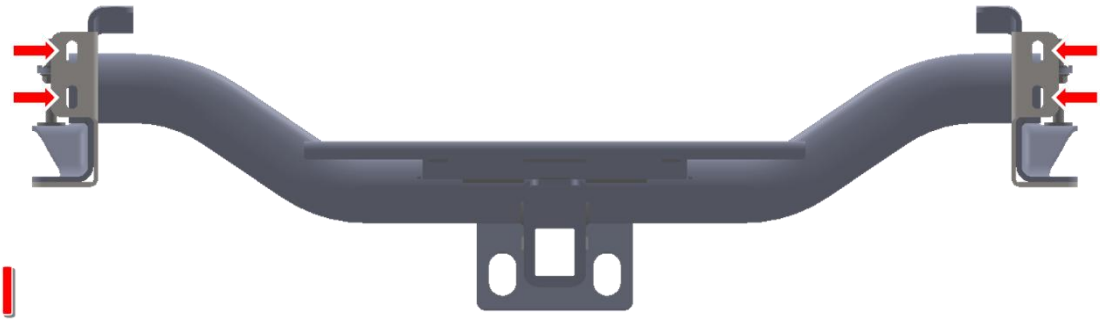

Fig I

7. Loosely install the supplied 1/2” Bolts (x4), 1/2” Washers (x8), and 1/2” Nuts (x4). Once all the bolts are loosely installed, align the bumper so that it is centered left/right and straight in relation to the tailgate. Then, tighten the mounting bolts to 70 foot pounds.
8. Install the supplied LED License Plate lights as your license plate bolts. (Fig J)
    a. Cut the license plate light connector off your OEM rear wiring harness.
    b. Use butt connectors to join the positive (red) wire on the supplied LED lights to the positive wire on your OEM harness.
    c. Use butt connectors to join the negative (black) wire on the supplied LED lights to the negative wire on your OEM harness.

ADDICTIVE DESERT DESIGNS

Fig J

9. Install the Trailer Plug Relocation Bracket (Fig K)
    a. Choose a spot to mount the bracket (make sure the wiring will reach the spot you choose).
    b. Using the adapter as a template, drill 2 holes with an 11/32” Drill Bit.
    c. Hold the bracket in place and install the supplied 3/8” Thread Cutting Bolts (x2).
    d. Push the trailer plug into the its precut hole in the relocation bracket and plug the connector into the back side of plug.

10. Stand back and enjoy your new ADD Venom Rear Bumper.
11. Check and re-tighten if needed, all mounting bolts after 100 miles and periodically thereafter.

For Additional Support or Technical Questions,
Please Call 480.671.0820 or
Email info@addictivedesertdesigns.com